This is to help me understand JFETs because they're used to switch the effect on/off in an overdrive

Basic Switching Circuit:

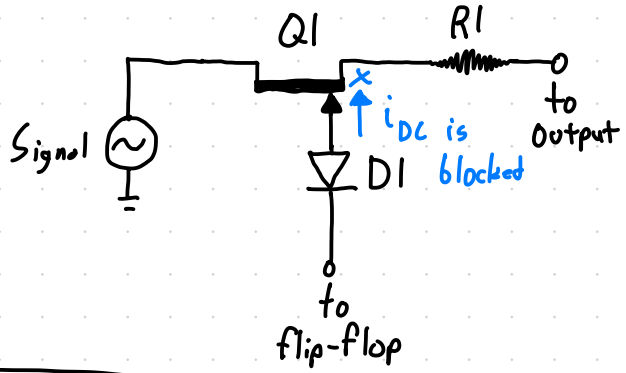

If Q1 was a JFET...

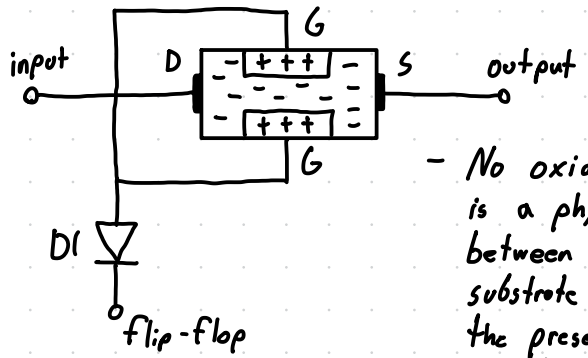

- No oxide layer, there is a physical connection between N & P-type substrate. That explains the presence of the rev. biased diode at the gate
- When D1 is forward biased, the channel is closed

NVM, no need for the MOSFET drawing b/c I get it now. At least in the context of this circuit.